CHAPTER

53

FUSELAGE

CONTENT

Name of item	Chapter Section/Subsection Subject	Page
GENERAL	53-00-00	53-1
FWD FUSELAGE SECTION	53-10-00	53-2
DESCRIPTION AND OPERATION		53-2
MAINTENANCE		53-6
PAINT RENEWAL		53-6
Paint renewal of fuselage latticework		53-6
APPROVED REPAIRS		53-7
Repair of fuselage latticework		53-7
Repair of steps		53-14
REAR FUSELAGE SECTION	53-20-00	53-15
DESCRIPTION AND OPERATION		53-15
MAINTENANCE		53-16
APPROVED REPAIRS		53-16
Repair of rear fuselage section		53-16
JOINING OF FWD AND REAR FUSELAGE SECTION	53-40-00	53-17
DESCRIPTION AND OPERATION		53-17
MAINTENANCE		53-19
REMOVAL / INSTALLATION		53-19
Removal of mount bolts joining fwd and rear fuselage sections		53-19
Installation of mount bolts of fwd and rear fuselage sections		53-19
APPROVED REPAIRS		53-22
Repair of joints of fwd and rear fuselage sections		53-22

INTENTIONALLY LEFT BLANK

EFFECTIVITY: All

GENERAL

The fuselage is of mixed design. The fwd section is of latticework (truss) structure wekded of steel tubes provided with glass fiber laminate and duralumin sheet bodywork while the rear section is of semi-monocoque design.
The rear fuselage section is joined to the fwd fuselage section with four suspension bolts.

FWD FUSELAGE SECTION

DESCRIPTION AND OPERATION

The welded fwd fuselage structure (Fig. 53-1) is made of steel tubes.

The main beam of fuselage structure (1) carries upper wing mounts (2), bottom wing mounts (3) and seat mounts (6).

The landing gear mounts are behind the main fuselage beam.

The rear fuselage beam carries rear wing mounts (4).

The front fuselage bulkhead carries upper engine mounts (7), bottom engine mounts (8), upper mount of nose landing gear (9) and bottom suspensions of nose landing gear braces (10).

The rear fuselage bulkhead carries mounts of rear fuselage section.

The fwd fuselage section is provided with firewall (Fig. 53-2, item 1), external bodywork (2), fixed cockpit canopy (3) and sliding cockpit canopy (4).

EFFECTIVITY: All

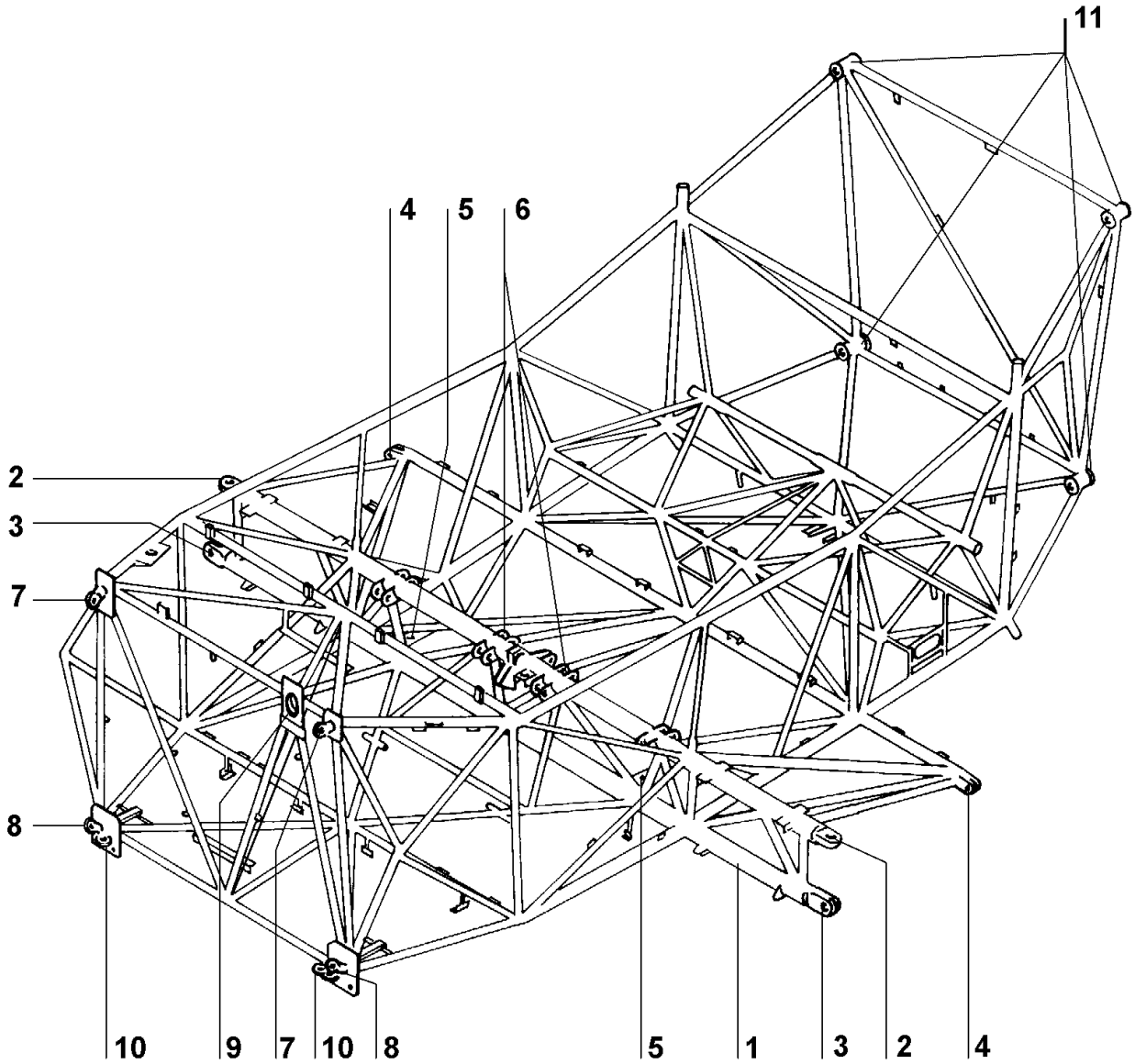

1 ... main beam of fwd fuselage section
2 ... upper wing mount
3 ... bottom wing mount
4 ... rear wing mount
5 ... main landing gear suspension
6 ... fwd seat mount
7 ... upper engine mount
8 ... bottom engine mount
9 ... upper mount of nose landing gear
10 ... lower suspension of nose landing gear braces
11 ... mounts of rear fuselage section

Fig. 53-1 Latticework of fwd fuselage section

EFFECTIVITY: up to S/N 0045 incl.

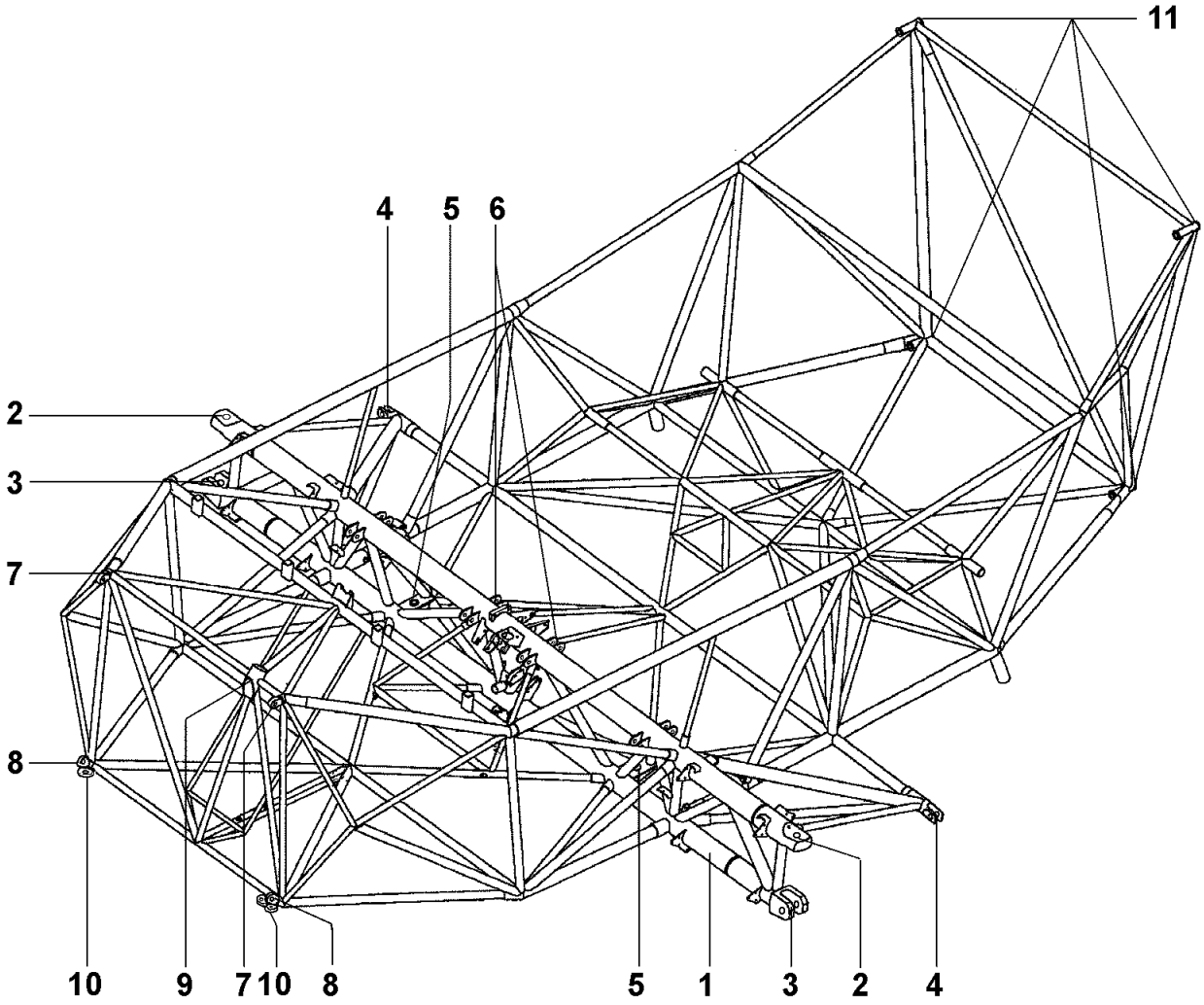

1 ... main beam of fwd fuselage section
2 ... upper wing mount
3 ... bottom wing mount
4 ... rear wing mount
5 ... main landing gear suspension
6 ... fwd seat mount
7 ... upper engine mount
8 ... bottom engine mount
9 ... upper mount of nose landing gear
10 ... lower suspension of nose landing gear braces
11 ... mounts of rear fuselage section

Fig. 53-1A Latticework of fwd fuselage section

EFFECTIVITY: from S/N 0046 incl.

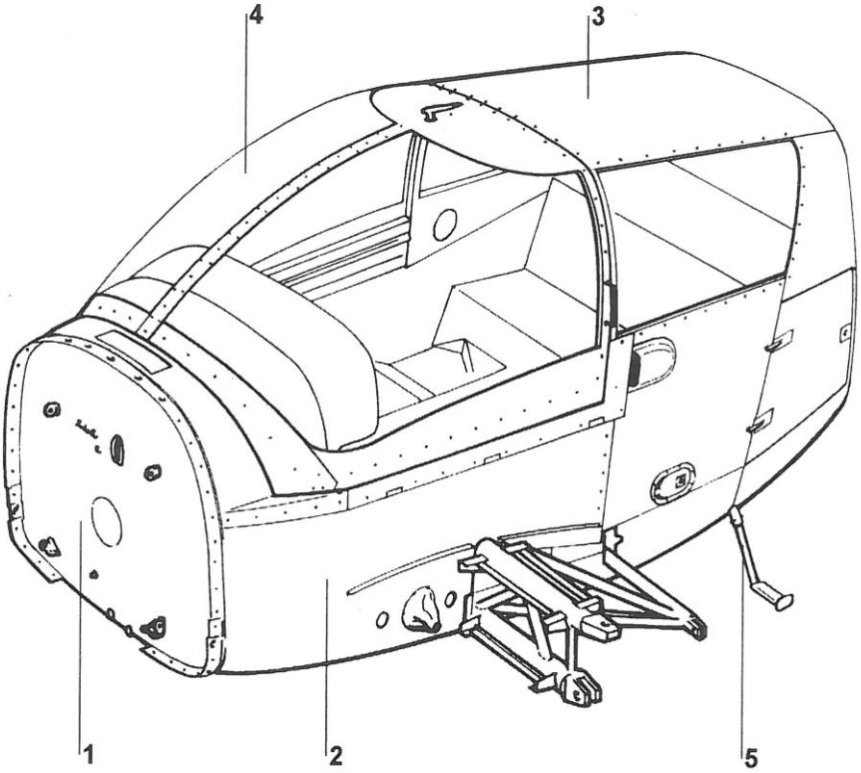

1 ... firewall
2 ... external bodywork
3 ... fixed canopy
4 ... sliding canopy
5 ... L, R step

Fig. 53-2 Fwd fuselage section

MAINTENANCE

PAINT RENEWAL

PAINT RENEWAL OF FUSELAGE LATTICEWORK

General instructions for paint repairs are issued in subsection 51-72-00.

1. Paint repair
   a) Clean the repaired spot.
   b) Paint the repaired spot with primer and after the primer drying apply one layer of approved enamel of original shade.
2. Renewal of paint of all the fuselage laticework
   a) Remove all the paint with paint remover and clean all the fuselage structure.

      NOTE

      Never remove paint with sand blasting or other abrasive method.
   b) Protect reamed holes and threads of riveted nuts against paint penetration and spray the fuselage structure with primer and two layers of approved enamel.
   c) Preserve unpainted spots with preservation grease.

   NOTE

   The paints used by airplane manufacturer are issued in subsection 51-72-00.

EFFECTIVITY: All

APPROVED REPAIRS

REPAIR OF FUSELAGE LATTICEWORK

Fault	Remedy
1) Dented holes (Fig. 53-1, item 2; 3; 4; 5; 7; 8; 10).	Ream the holes according to sections 32-10-00; 32-20-00; 57-40-00; 71-20-00 - APPROVED REPAIRS.
2) Corrosion of external surface.	Repair according to subsection 51-11-00.
3) Cracks in structure tubes or main fuselage spar mounts.	Let the main spar of fuselage latticework replaced by manufacturer or authorized repair shop.
4) Cracks in welding.	Repair welding.

Welding repair:

NOTE

Use 10x-power magnifying glass to check fuselage latticework welds. Check welds of main fuselage spar by flaw detection method. The cracks in the bottom flange plate are indicated by drop of pressure at the pressure gauge – see section 31-20-00).

The fuselage latticework repairs by welding may be carried out by pertinently authorized professional welder. It is recommended to weld the thin-wall tubes made from high-alloy steel after preheating. The repair of main fuselage spar by welding is allowed either by manufacturer or by authorized repair shop.

The welding repairs of fuselage latticework should be made in welding shops without drought and wind and at + 10 ^{o}C (50 ^{o}F) minimum air temperature.

a) Remove paint to be the spot of welding metal clean:
   - 5 cm (2 in) around the repaired spot when welding thin-wall tubes
   - 7 cm (2,8 in) around the repaired spot when welding thic-wall tubes, i.e. 2,5 mm (0,1 in) thick.

   NOTE

   Removing the paint by sandblasting is allowed in the spots requiring this way of cleaning providing the excessive thinning of tube does not occur.

b) Remove weld bead in the spot of crack:
   - of the fillet weld to height equal to the thickness of thinner part of joint
   - of the butt weld in the shape of V-groove with 70 ^{o}C to 80 ^{o}C (158 ^{o}F to 176 ^{o}F) apex angle up to 2/3 of thickness of the basic material.

c) Repair faulty weld of main and rear spars of fuselage latticework should be repaired with TIG method. Repair faulty welds at the other parts of fuselage latticework by G method.

   - TIG method (argon-arc welding)

     - use for welding 1,5 mm or 1,6 mm (0,059 or 0,063 in) tungsten electrodes grind tipped to long tips that are suitable for tungsten electrodes alloyed with thorium.

     - filler material, that is the Böhler DCMS-IG 1,5 mm or 1,6 mm (0,059 or 0,063 in) wire, should be wiped before welding with dry rag.

     - TIG welding apparatus should be equipped with contactless arc start-up by means of ionizer. Use carbon or cooper start-up base pad in case the ionizer is not at the disposal.

- adjust welding apparatus as follows:
  set argon quantity to ..... 10 to 15 l/min (2,6 to 4,0 US gal/min)
  set current intensity to ... 30 to 60 A (according to thickness of welded material)

- reduce quantity of filler material when ending the weld if at that time it is impossible to reduce current intensity. Reduce electrode angle of inclination until the electric arc is extinguished.

- ensure protection of hot weld by flow of argon until the weld temperature drops below 800 °C (1470 °F), i.e. to cherry-red heat.

- cover the repaired spot with asbestos cloth to reduce cooling of weld and its surrounding. Remove asbestos cover as soon as the spot temperature is about 100 °C (210 °F).

- temper the bulk, dynamically highly exposed and temperature expansion sensitive spots of repairs as follows:
  heat the welded spot with flame to about 600 to 650 °C (1110 °F to 1210 °F) for 5 minutes. Let the head soaked weld cool down naturally by ambient air.

- <u>G method</u> (manual flame welding)

  - filler material is the 1,5 mm to 1,6 mm (0,059 to 0,063 in) Böhler DCMS.

  - preheat the complicated nodes before welding to 250 to 300 °C (480 °F to 570 °F). Check the temperature using the thermographic chalk.

  - cover the weld repaired spots with asbestos cloth

  - temper the repaired spot as follows: heat the weld and its surrounding to 600 °C to 650 °C (1110 °F to 1210 °F) and let it, when heat soaked, cool down naturally by ambient air.

d) Clean the repaired spot and check the weld quality.
check weld tightness after repair of main spar bottom flange plate as follows:
- fill the bottom flange plate with nitrogen to 500 kPa (72 p.s.i.) according to airplane pressure gauge or to 1500 kPa (218 p.s.i.) if external pressure gauge of greater range is used
- apply soap water upon checked weld
- check tightness of welds - no bubbles may be visible and no pressure drop at the pressure gauge may occur

e) Repair paint (see REPAIR OF PAINT OF FUSELAGE LATTICEWORK).

EFFECTIVITY: All

Fault	Remedy
5) Pores (bubbles), undercuts, improper welds.	1 mm (0,04 in) or smaller pores may be hammered off. Grind off the pores, undercuts and improver welds greater than 1 mm (0,04 in) and repair by TIG or G method.
6) Deformation tubes of main fuselage spar.	Let the main fuselage spar replaced by manufacturer or authorized repair shop.
7) Deformation tubes of fuselage latticework out of main fuselage spar.	Level or replace faulty tubes.

Tube repair:

NOTE

Check if the tubes of fuselage latticework are deformed in case of improper results of airplane leveling (section 08-20-00) or after heavy landing.

a) The tube deformation or ovalness is allowed in case the distance of deformation from the node is more than 20% of total tube length.

Permissible tube diameter deformation:

Tube diameter D	up to 20 mm (0,8 in)	above 20 mm (0,8 in)
Permissible deformation	max. 5 % D	max. 1 mm (0,04 in)

In case the defloration of tube is greater it is necessary to replace it by TIG or G welding method.

b) Permissible tube bending between nods:

Tube length	up to 300 mm (12 in)	above 300 mm (12 in)
Permissible bent	max. 0,5 % of length	max. 1,5 mm (0,06 in)

- The tubes marked in Fig. 53-3 with thick solid line except main fuselage spar
  - do not level the bent tubes
  - the bent tubes exceeding the permissible bent should be replaced by TIG method welding
- The tubes marked in Fig. 53-3 with thin solid line
  - level the bent tubes if the bending does not exceed 2,5 mm (0,1 in)
  - replace these tubes by TIG or G welding method if their bending exceeds 2,5 mm (0,1 in)
- The tubes marked in Fig. 53-3 with dashed line
  - level the tubes of bent less than 5 mm (0,2 in)
  - replace the tubes by G welding method if their bending exceeds 5 mm (0,2 in).

Level the tubes of smaller bending by means of rubber mallet and if the bending is greater use flame heating. Proceed in tube leveling with care to prevent tube deformation and/or damage.

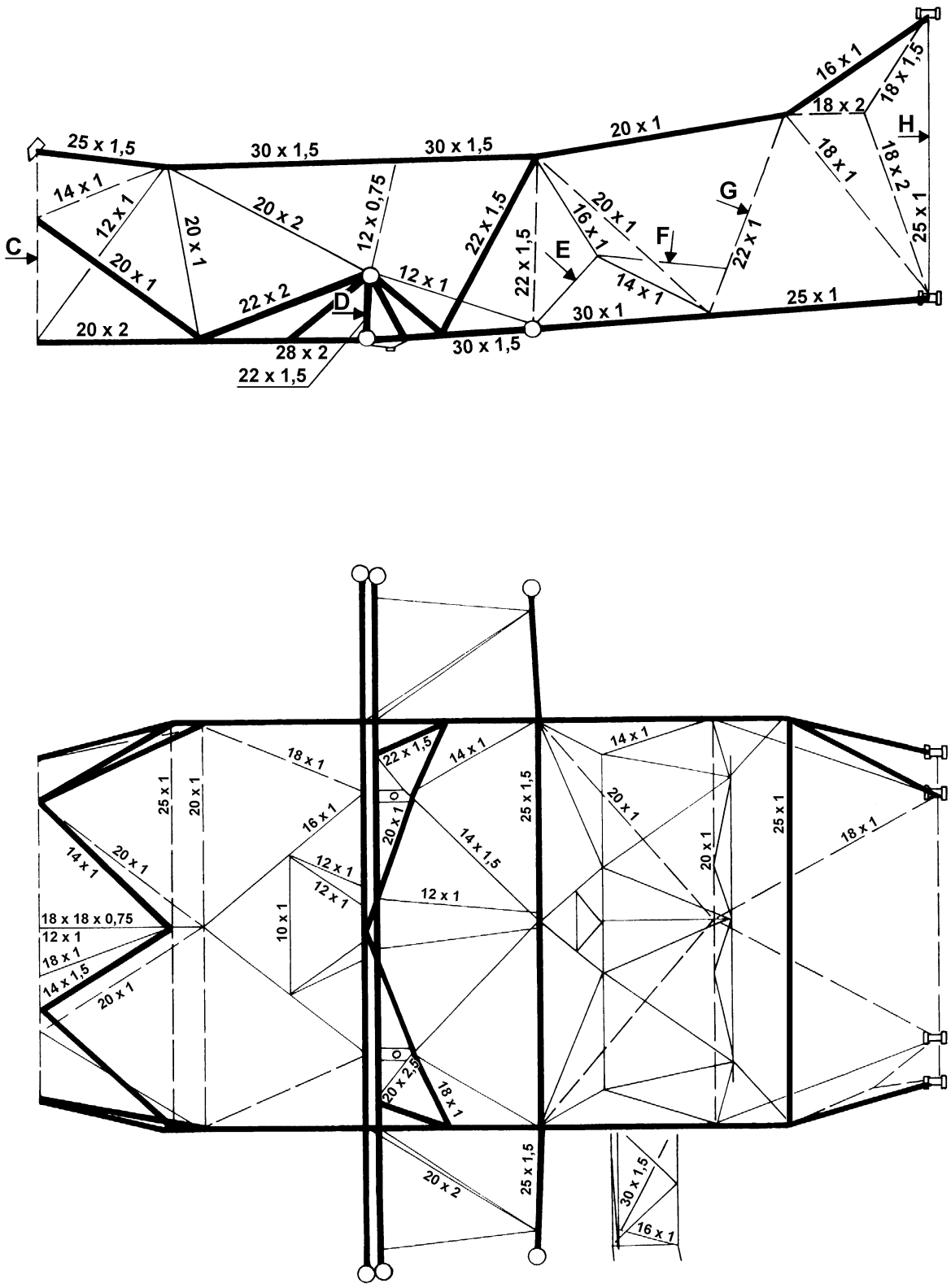

Fig. 53-3 Repair of fuselage latticework
(page 1 of 3)

EFFECTIVITY: up to S/N 0045 incl.

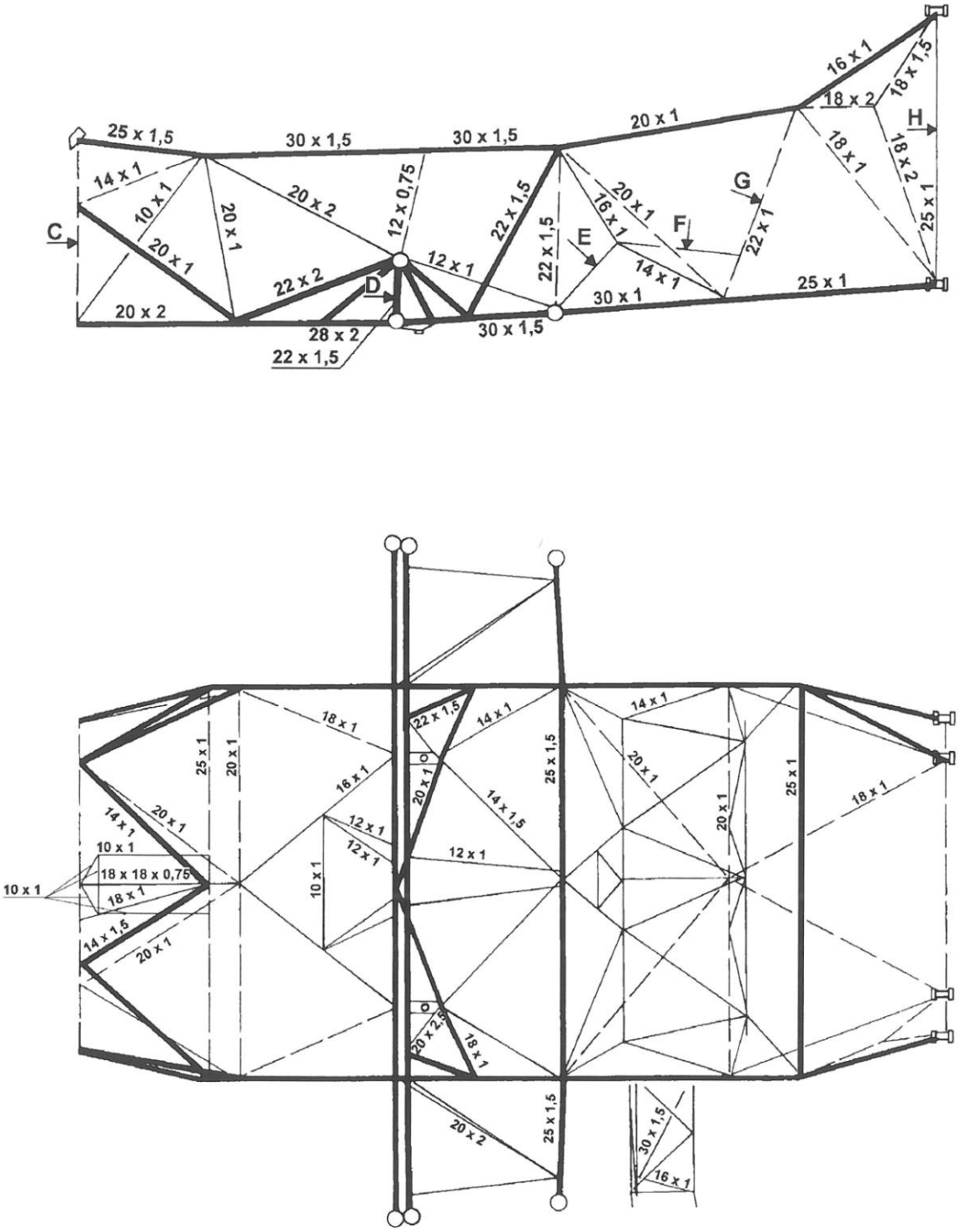

Fig. 53-3A Repair of fuselage latticework
(page 2 of 3)

EFFECTIVITY: from S/N 0046 incl.

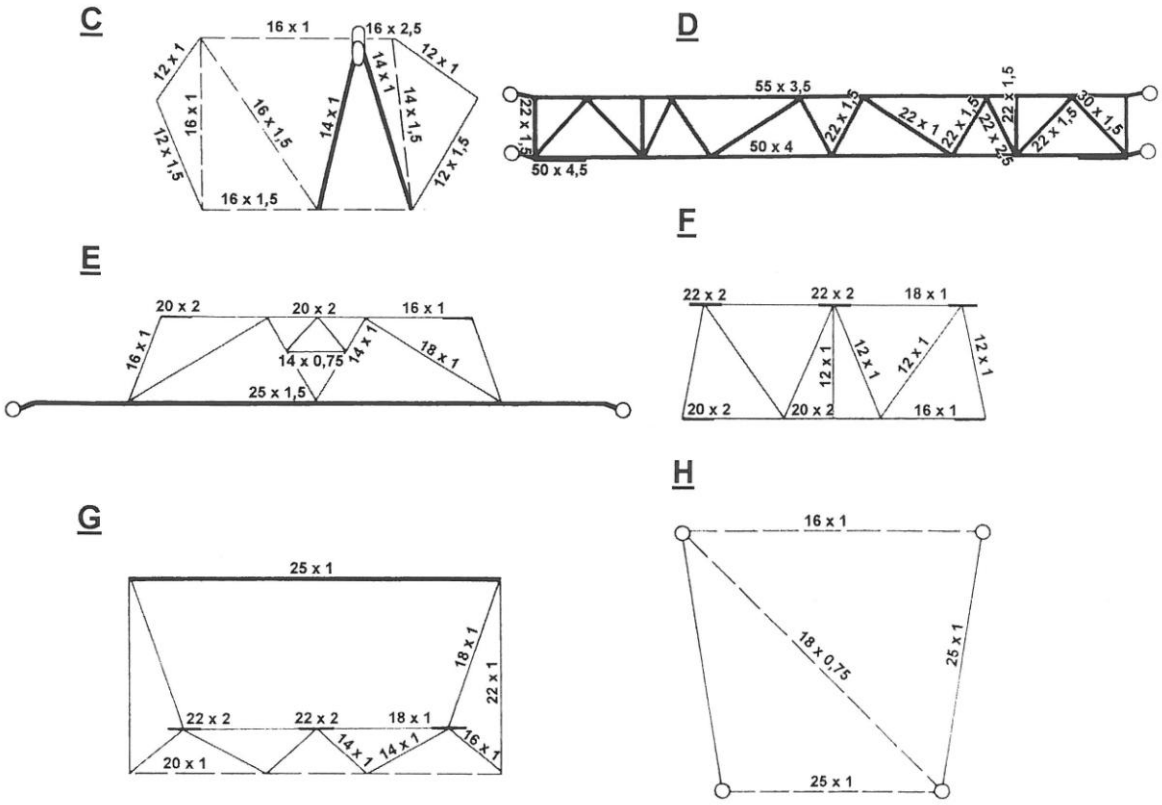

C ... fwd fuselage latticework bulkhead
D ... main fuselage spar
E ... rear fuselage latticework spar with inclined bulkhead
F ... bulkhead under the rear seats
G ... bulkhead behind rear seats
H ... rear bulkhead of fuselage latticework

Tube marking:

━━━━━━	never level bent tubes, tube replacement is necessary, the main fuselage spar with bent tubes should be replaced as a whole
────────	level the bent tubes if the bending is less than 2,5 mm (0,1 in)
- - - - - -	level the bent tubes if the bending is less than 5 mm (0,2 in)

Fig. 53-3 Repair of fuselage latticework (page 3 of 3)

EFFECTIVITY: All

c) Tube replacement
- Cut the faulty tube off. Make „V“ shape cut-outs (4) one against the other in tubes of fuselage latticework (Fig. 53-4, item 1)
- Prepare new tube (2) of the same dimensions. The new tube should be made from L-CM3.9 material, sandblasted and checked to detect cracks, ovalness and bents.

NOTE

The external diameters and wall thickness are issued in Fig. 53-3, e.g. 12x1 data designates tube with 12 mm (0,47 in) external diameter and 1 mm (0,4 in) thick wall.

- Make out insertion pieces (Fig. 53-4, item 3) with external diameter similar to internal diameter of tube (2). The wall thickness of the insertion piece is the same as that of tube (2). The length of insertion piece is to be 2x or 3x the external tube (2) diameter.
- Make a mark in the middle of insertion pieces (3), insert them up to the end to the tubes of fuselage latticework (1) and fit in place the tube (2). Slide the insertion pieces (3) by needles through the cut-outs (4) into the new tube to be placed symmetrically with respect to new welded joint.
- Weld the joint all along the periphery and temper it with flame to achieve 588 - 785 MPa tensile strength.
- Clean the welds, check the weld quality and repair painting (see PAINT REPAIR OF FUSELAGE LATTICEWORK).

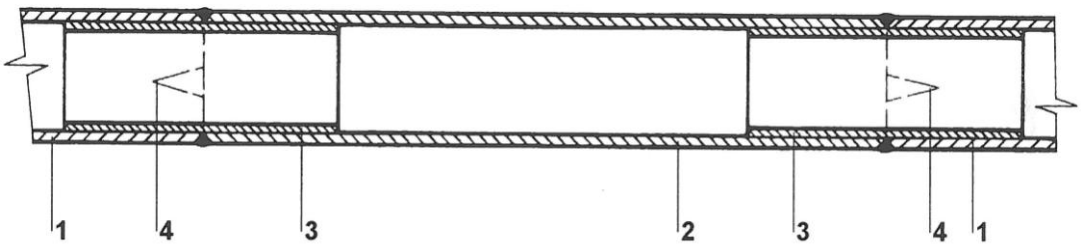

1 ... fuselage latticework tubes
2 ... tube
3 ... insertion pieces
4 ... cut-outs

Fig. 53-4 Replacement of tube of fuselage latticework

Fault	Remedy
8) Faulty parts of fuselage latticework as sheets and mounts.	Replace faulty parts. Use L-CM3.33 material for sheet parts replacement. Use following templates when replacing parts influencing the airplane levelling dimensions: - 34-Z 42-202 (for checking the wing mounts) - 34-Z 42-444 (for checking the main landing gear mounts) - 32-Z 42-334 (for checking and reaming of fwd seat mounts) - 34-Z 42-207 (for checking and reaming of upper nose landing gear mount) - 34-Z 42-204 (for checking and reaming of rear fuselage mounts).

REPAIR OF STEPS

Fault	Remedy
1) Cracks and deformation (Fig. 53-2, item 5).	Weld the cracks, level the step deformations and bents and repair step paint. Replace excessively deformed or cracked steps.

REAR FUSELAGE SECTION

DESCRIPTION AND OPERATION

The rear fuselage section (Fig. 53-5) is of semi-monocoque structure.

The fwd bulkhead of rear fuselage section is provided four mounts (1) that serve for joining the rear fuselage section to the fwd fuselage section.

The rear bulkhead of rear fuselage section carries stabilizer (2) and stabilizer brace (3) mounts. The upper part of rear fuselage section carries the fin (4). In the bottom rear side of rear fuselage section there is skid carrier (5).

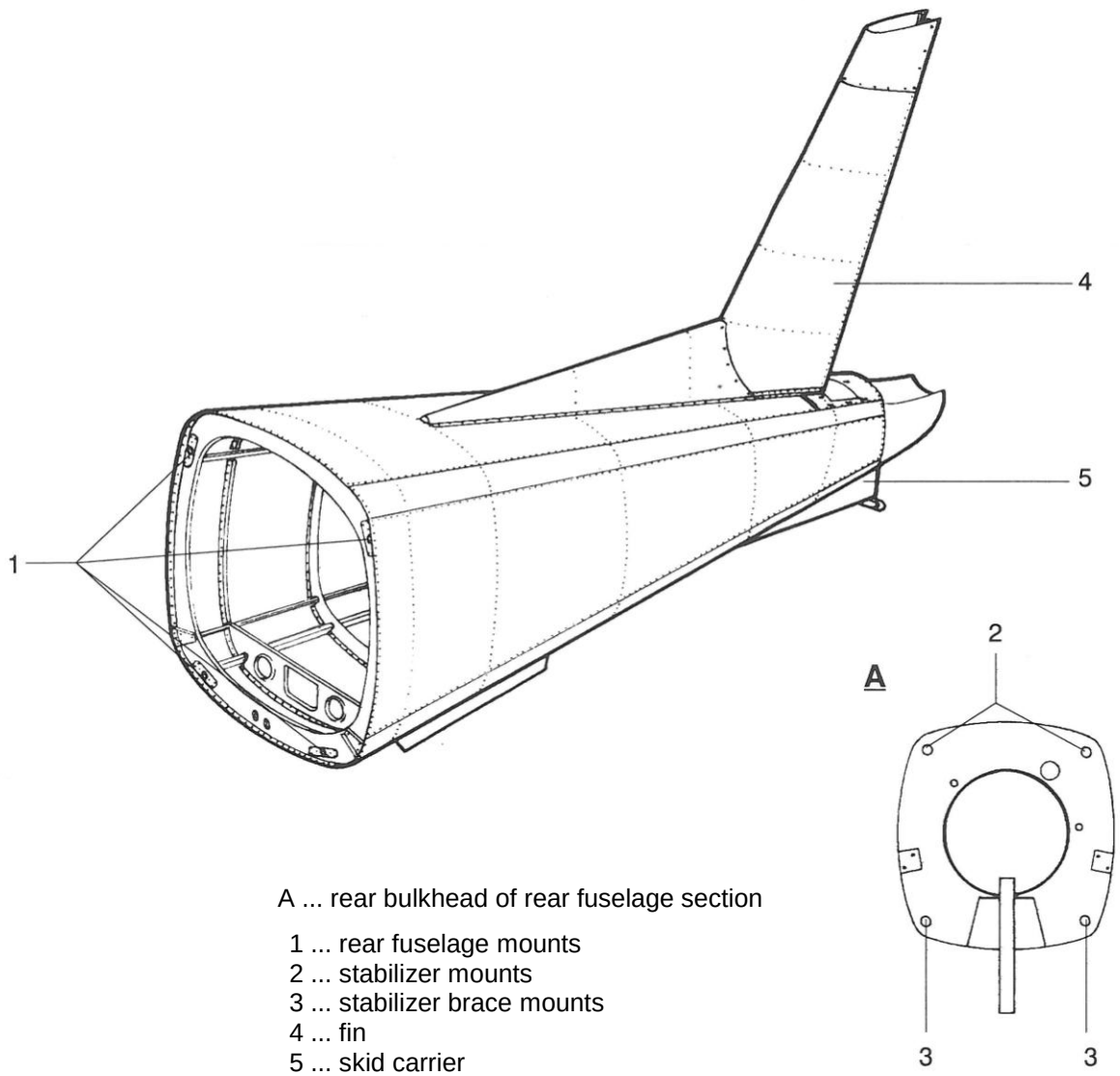

A ... rear bulkhead of rear fuselage section

1 ... rear fuselage mounts
2 ... stabilizer mounts
3 ... stabilizer brace mounts
4 ... fin
5 ... skid carrier

Fig. 53-5 Rear fuselage section

MAINTENANCE

APPROVED REPAIRS

REPAIR OF REAR FUSELAGE SECTION

Fault	Remedy
1) Faulty skin of rear fuselage section to detect cracks, deformations and/or skin punctures).	Repair faulty skin according to instructions for wing repair in section 57-10-00, “REPAIR OF MECHANICAL DEFECTS OF WING SKIN, RIBS AND LONGERONS”.

EFFECTIVITY: All

JOINING OF FWD AND REAR FUSELAGE SECTION

DESCRIPTION AND OPERATION

The rear fuselage section is joined to fwd fuselage latticework by means of four mount bolts (Fig. 53-6, item 1). The mount bolts are inserted into the mounts from behind of rear fuselage section (2). Each mount bolt is provided under its head with spherical washer (4) and tab washer (5). The fwd part of each mount bolt is provided with tab washer (6) and screwed nut (7).

The mount bolts are tightened to achieve necessary tension. The tension magnitude is measured by bolt elongation during installation. The mount bolt length should be elongated for 0,12 to 0,14 mm (0,0047 to 0,0055 in) with respect to the original length before installation.

NOTE

The bottom mount bolts are accessible through access ports in floor of bottom cargo compartment.

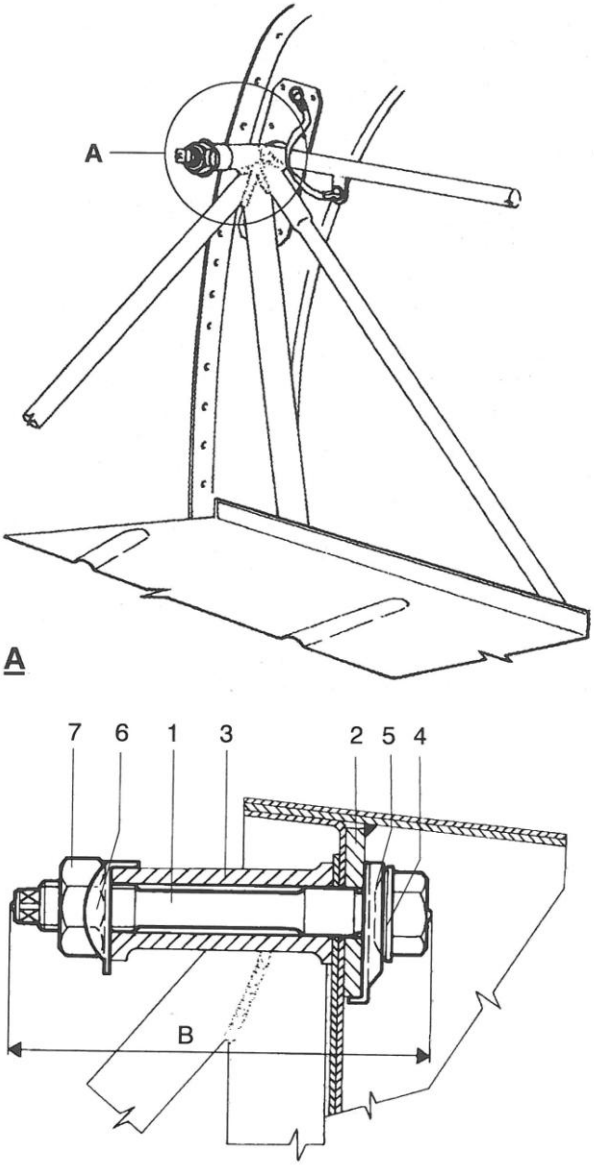

A ... detail of rear mount
B ... length of mount bolt (1)

1 ... mount bolt (4 ks)
2 ... mount in rear fuselage section
3 ... mount in fwd fuselage latticework
4 ... spherical washer
5 ... tab washer
6 ... tab washer
7 ... nut

Fig. 53-6 Joining of fwd and rear fuselage sections

EFFECTIVITY: All

MAINTENANCE

REMOVAL / INSTALLATION

REMOVAL OF MOUNT BOLTS JOINING FWD AND REAR FUSELAGE SECTIONS

CAUTION

LOCK BOTH CABLE ENDS (Fig. 27-17, item 1; 2) OF PITCH TRIM AT THE DRUMS (7, 12) BY SAFETY WIRE TO PREVENT UNWINDING THE CABLE THREADS FROM THE DRUMS DURING CABLE DISCONNECTION.

Preparatory works

a) Uncouple:
- elevator pushrods (Fig. 27-14) between fwd and rear fuselage sections
- turnbuckles (Fig. 27-10, item 2) of rudder control cables (1)
- turnbuckles (Fig. 27-17, item 3) of pitch trim control cable (1, 2)
- control cable of towing mechanism (if installed) at the unlocking lever in cockpit; connector upon the first bulkhead of rear fuselage section
- COMM/NAV antenna, coaxial connectors after releasing the fixing straps
- static pressure lines (Fig. 34-1, item 6) in rear fuselage section after their releasing from clips
- 2 pcs of bonding upon the first bulkhead of rear fuselage section.

b) Remove two access covers in bottom cargo compartment floor. Unfasten the upper partition wall.

c) Place two shoring stands under the rear fuselage section bulkheads.

d) Drill rivets joining the fwd fuselage bodywork and rear fuselage section off.

Removal of mount bolts

a) Bend off the tab washer (Fig. 53-6, item 6) and unscrew the nuts (7).

b) Move the rear fuselage section from the fwd section and pull the mount bolts (1) from the rear fuselage section mounts (2).

INSTALLATION OF MOUNT BOLTS OF FWD AND REAR FUSELAGE SECTIONS

a) Measure and record the length of mount bolts into the Leveling and Adjustment Record (section 08-20-00) the length of mount bolts (Fig. 53-6, length B) before installation. Mark the individual mount bolts with stamping due by numbers 1; 2; 3 and 4.

b) Grease the mount bolts (1) with grease (subsection 05-21-00). Provide bolts with spherical (4) and tab washer.

c) Insert the mount bolts into the mounts (2) in rear fuselage section according to stamped numbers and location being ilustrated Fig. 08-5.

d) Fit the rear fuselage section upon the fwd fuselage latticework. Insert the mount bolts into the mounts (Fig. 53-6, item 3) in fwd fuselage section. When inserting the upper mount bolts set the rear fuselage section inclined a bit upwards.

e) Provide mount bolts with tab washers (6) and screw the nuts (7) on.

f) Tighten the nuts (7) to achieve the bolt (1) elongation for 0,12 to 0,14 mm (0,0047 to 0,0055 in) with respect to the bolt original (untaught) length.

Recommendation

Measure the lengths of mount bolts with ČSN 25 1420 micrometer (Fig. 53-7, item 1) or suitably adapted micrometer (2) that is provided with two adaptation pieces (3) to enable micrometer fitting to mount bolt.

g) Measure the legth of mount bolts and tighten the nuts if necessary (Fig. 53-6, item 7). Record length of mount bolts after the installation to the Leveling and Adjustment Record (section 08-20-00).

h) Lock the mount bolt head and nut (7) with tab washers (5; 6).

Final works

a) Join and connect:
- elevator pushrods (Fig. 27-14) between fwd and rear fuselage sections
- turnbuckles (Fig. 27-10, item 2) of rudder control cables
- turnbuckles (Fig. 27-17, item 3) of pitch trim control cable (1, 2)
- control cable of towing mechanism (if installed) at the unlocking lever in cockpit; connector upon the first bulkhead of rear fuselage section
- COMM/NAV antenna, coaxial connectors and fix by straps
- static pressure lines (Fig. 34-1, item 6) in rear fuselage section and fix in clips
- 2 pcs of bonding upon the first bulkhead of rear fuselage section.

b) Screw two access port lids to the floor of bottom cargo compartment. Fix the upper partition wall.

c) Rivet the fwd fuselage bodywork with the rear fuselage section and repair paint in the spot of riveting.

d) Check serviceability and adjustment of rudder, elevator and pitch trim controls and check locking of nuts and turnbuckles.

e) Remove shoring stands.

EFFECTIVITY: All

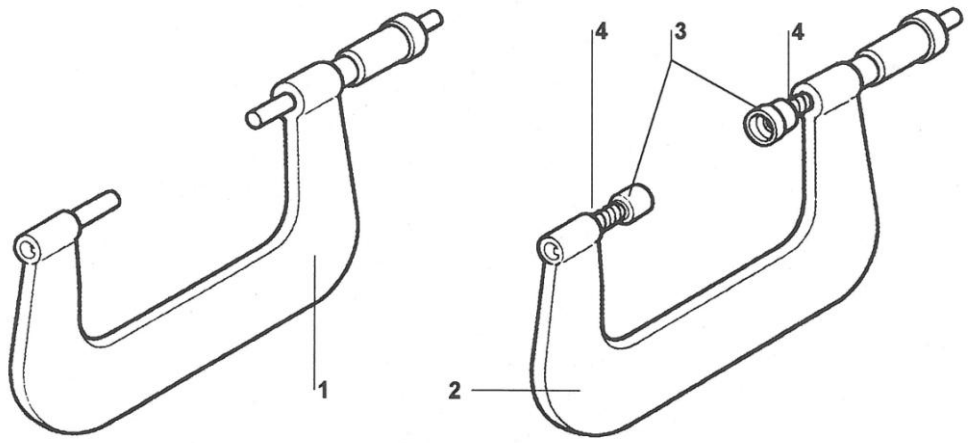

1 ... ČSN 25 1420 micrometer
2 ... adapted micrometer (Note)
3 ... adaptation piece
4 ... spring

NOTE

The adapted micrometer (2) is a part of 157-632-0030 fixture set for assembly and measurement of mount bolts.

Fig. 53-7 Micrometer for measurement of mount bolts

APPROVED REPAIRS

REPAIR OF JOINTS OF FWD AND REAR FUSELAGE SECTIONS

Fault	Oprava
1) The length of mount bolt is less than value issued in the Leveling and Adjustment Record.	Tighten the nuts of mount bolts to achieve the length of mount bolts corresponding to the LEVELING AND ADJUSTMENT RECORD. Lock the nuts after tightening
2) The length of mount bolts is greater than value issued in the Leveling and Adjustment Record.	Remove mount bolts, measure their length and compare with the original bolt dimension as issued in the LEVELING AND ADJUSTMENT RECORD. Replace constantly elongated bolts. Install bolts with original dimensions again (see INSTALLATION OF MOUNT BOLT).
3) Broken spherical washer (Fig. 53-6, item 4).	Replace faulty spherical washer.

EFFECTIVITY: All